PRODUCT SHEET

Description:
Saloon Door Double Action Spring Hinge, 102mm, SS304 Brushed For Door Thickness 18 to 25 mm, Max Door Weight 22KG

Item number:
15.20.121-0

Units	Box	Carton	HS Code	Barcode
Pcs.	1	20	8302100090	5704866517072

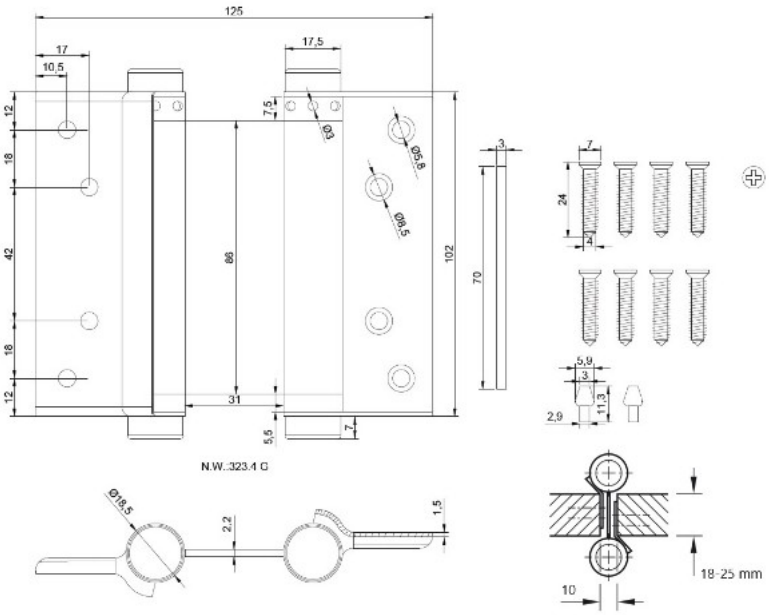

SISO A/S
Mileparken 11
DK-2740 Skovlunde
Denmark
VAT: 24786013

Phone +45 45 830 900

www.siso.dk
siso@siso.dk

Danske Bank
Nytorv Branch
Copenhagen
SWIFT: DABADKKK

Account no.
4180 3112 112936
IBAN Account
DK7230003112112936